Preliminary Design Document

for "Arduino′s Moving Castle″

Version 1.0

Date 2025/10/24

Table of Contents

1. Project Overview ---------- **3**

2. Product Design ---------- 3

2.1 Block Diagram ---------- 3

2.2 Sub-Circuit Descriptions ---------- 4

2.2.1 Sub-Circuit #1: Legs ---------- 4

2.2.1.1 Micro Servo Motors (MSM_1 to 12)---------- 4

2.2.1.2 Calculating the Castle's Max Payload ---------- 4

2.2.1.3 Servo Motor Driver (SMD_1) ---------- 6

2.2.2 Sub-Circuit #2 Ultrasonic Sensor (US_1) ---------- 7

2.2.3 Sub-Circuit #3 Shift Register (SR_1) ---------- 9

2.3 Internal Interfaces ---------- 10

2.3.1 Arduino and Servo Motor Driver ---------- 10

2.3.2 Servo Motor Driver and Micro Servo Motors ---------- 10

2.3.3 Arduino and Ultrasonic Sensor ---------- 11

2.3.4 Arduino and Shift Register ---------- 11

2.3.5 Shift Register, Passive Buzzer, LED Diodes ---------- 12

3. Scheduling ---------- 12

3.1 Tasks ---------- 12

3.2 Gantt Timeline ---------- 13

Appendix ---------- 15

Appendix.A Schematic ---------- 15

Appendix.B Parts List ---------- 15

Appendix.C Visual Design and Sketches ---------- 17

Appendix.D Acronyms, Abbreviations, and Terms ---------- 18

Appendix.E Resources ---------- 19

1. Project Overview

Arduino's Moving Castle will be a functional, miniature recreation of *Howl's Moving Castle*, by Studio Ghibli, assembled using Arduino components. Using a blend of fantasy and technology, this project will use programmable hardware to create a whimsical castle full of life and motion.

The Castle will imitate natural movements, with complex walking sequences, LED lights, and the tune of the iconic OST from the movie, "Merry Go Round of Life", playing in the background. This project is designed to appeal to both makers and engineers alike, integrating both visual art and technology seamlessly. The Castle will be battery powered, allowing it to walk free in the classroom. (HRS-3.4.2) Many aspects and requirements of this document are based on this project's hardware requirement specification document.(HRS-3.5.3)

2. Product Design

2.1 Block Diagram

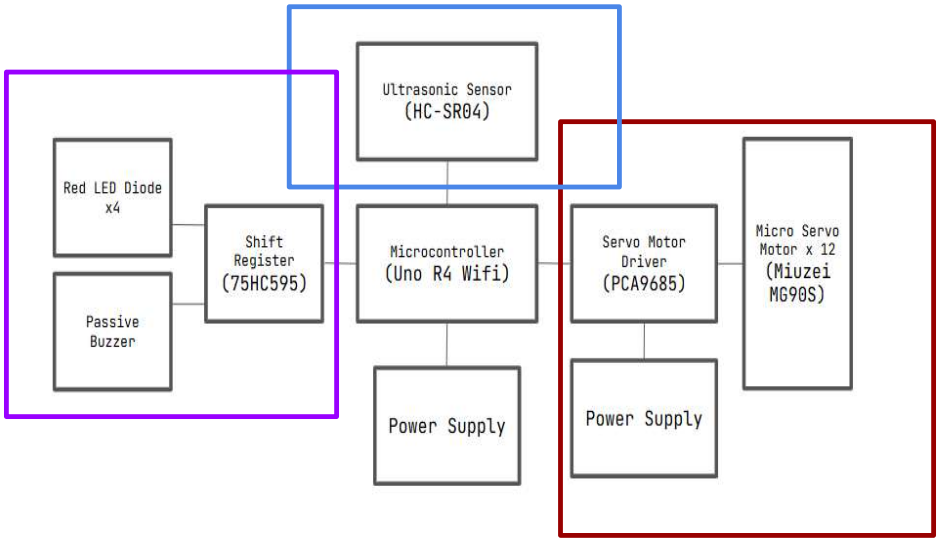

Name and RefDes:

Name	RefDes
HC-SR04:	US_1
Uno R4:	AUWR4_1
Power:	BT1, BT2
75HC595:	SR_1
Red LED:	D_1 to 4
Buzzer:	BZ_1
PCA9685:	SMD_1
Servos:	MSM_1 to 12

2.2 Sub-circuit Descriptions

2.2.1 Sub-circuit #1: Legs

This sub-circuit is meant to identify interactions between the AUWR4_1 (Arduino Uno R4 Wifi), the SMD_1(Servo Motor Driver), and the MSM_1 to 12 (Micro Servo Motors), as well as illustrate their functionality.

2.2.1.1 Micro Servo Motors (MSM_1 to 12)

A micro servo motor is a mechanical device that provides controlled rotational positioning. They have a light weight build, and are very efficient, moving faster proportionally to how far the desired position is from the starting position.

The desired position is sent through the signal wire with PWM, using a clock cycle of one pulse per 20ms. The length of the pulse determines the position of the output shaft.

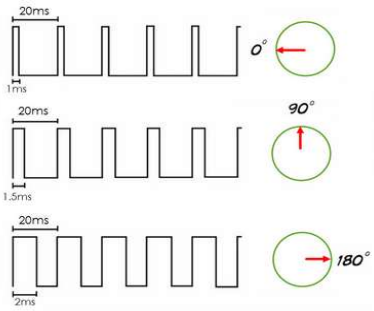

image from: https://www.engineersgarage.com/servo-motor-sg90-9g-with-89c51-microcontroller/

MSMs (micro servo motors) will provide all the movement of the Castle. Using the precise positioning of the motors, each joint in the legs will be able to move independently, allowing the Castle to stand, walk, and turn. There will be 12 MSMs, with 3 motors per leg, and each leg will have the same configuration. By granting each leg a full range of motion, the Castle will be able to walk, with 3 legs on the ground at all times, reducing the load per leg. (HRS-3.1.2)(HRS-3.1.3)(HRS-3.1.4)(HRS-3.4.1)

2.2.1.2 Calculating the Castle's Max Payload

The Body of the Castle needs to be able to lift the Decorative Castle. The following calculations will determine how much weight the legs can theoretically carry safely.

Servo Brand: Miuzei MG90S 9g Micro Servo Motors

Givens:

- (T)Stall Torque: 2kg/cm
- (L) Leg Length: 6 cm
- (n) Constant Number of Legs contacting ground: 3
- (d)Dynamic Modifier: 1.5 (estimated)
- (w) Base Weight: ¼ kg (estimated)
- (s) Safe Operational Range: (60%)

1. Calculate Max Static Load Per Leg

$M_{static} = T/L$

$M_{static} = 2kg/6$

$M_{static} = ⅓\ kg$

2. Calculate Total Max Static Load

$M_{total\ static} = M_{static} * n$

$M_{total\ static} = ⅓\ kg * 3$

$M_{total\ static} = 1\ kg$

3. Calculate Max Dynamic load

$M_{dynamic} = M_{total\ static} / d$

$M_{dynamic} = 1 / 1.5$

$M_{dynamic} = ⅔\ kg$

4. Calculate Max Theoretical Payload

$P = M_{dynamic} - w$

$P = ⅔\ kg - ¼\ kg$

$P \approx 0.417kg$

5. Payload at Safe Functional Range

$P_{safe} = P * s$

$P_{safe} = 0.417kg * 0.60$

$P_{safe} \approx 0.250kg$

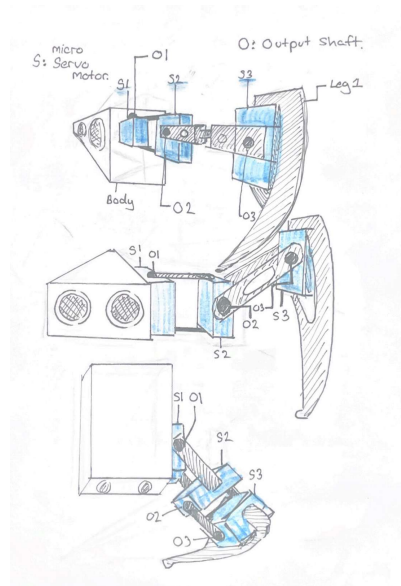

drawings are not to scale

—----------

Calculation Assumptions:

1. There will be a continuous 3 legs contacting the ground at all times.

2. The base weight of the electronics will be less than 250g

3. The total length of the legs will be 6cm.

4. The Castle will have a fairly balanced weight distribution between legs when walking, with minimal movement.

Therefore, using the Miuzei MG90S 9g Micro Servo Motors, the Decorative Castle can weigh up to 250g. (HRS-3.1.1) (HRS-3.5.2)

2.2.1.3 Servo Motor Driver (SMD_1)

The PCA9685 servo driver is a 16-channel controller that uses an I2C serial communication bus. The servo driver can be set to a specific PWM frequency that will be used across all outputs. Each output is independently controlled and can use an adjustable duty cycle to send the desired pulse for position. The PCA9685 can provide 12-bit PWM control (4096 steps), providing precision for the micro servo motors. (HRS-3.3.1)

For the Castle, the PCA9685 servo driver will control 12 micro servo motors. The PWD frequency will be set to 50Hz, which is the standard for servo motors, and the duty cycle will range from 5%-10%, providing a full range of motion (180 degrees). Additionally, there will be a separate battery pack to power the servo motor driver. (HRS-3.4.2)

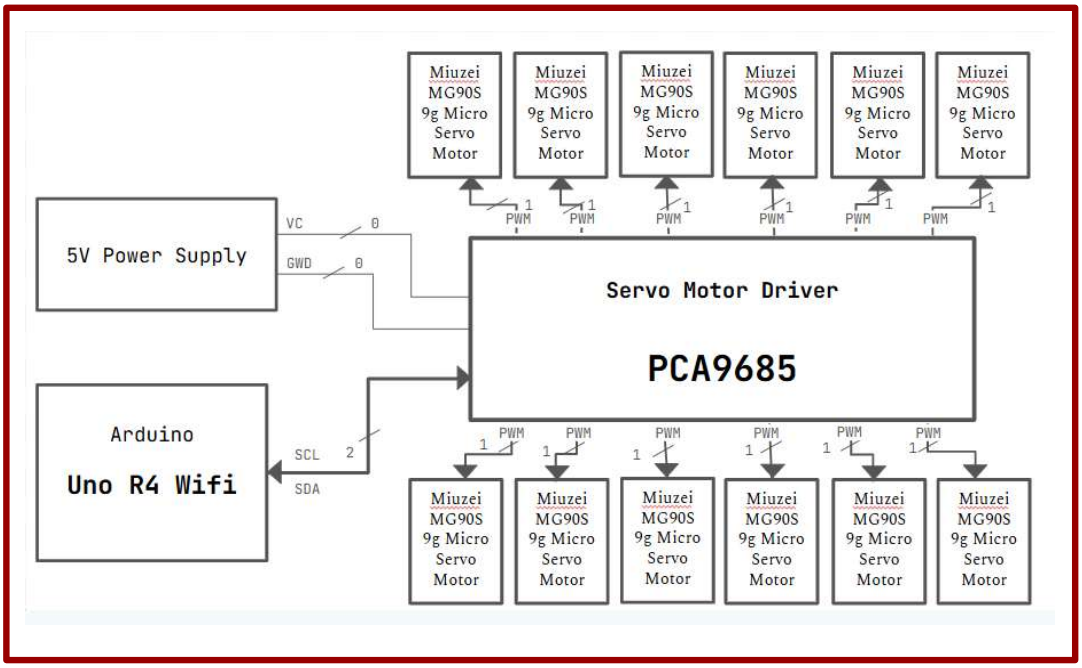

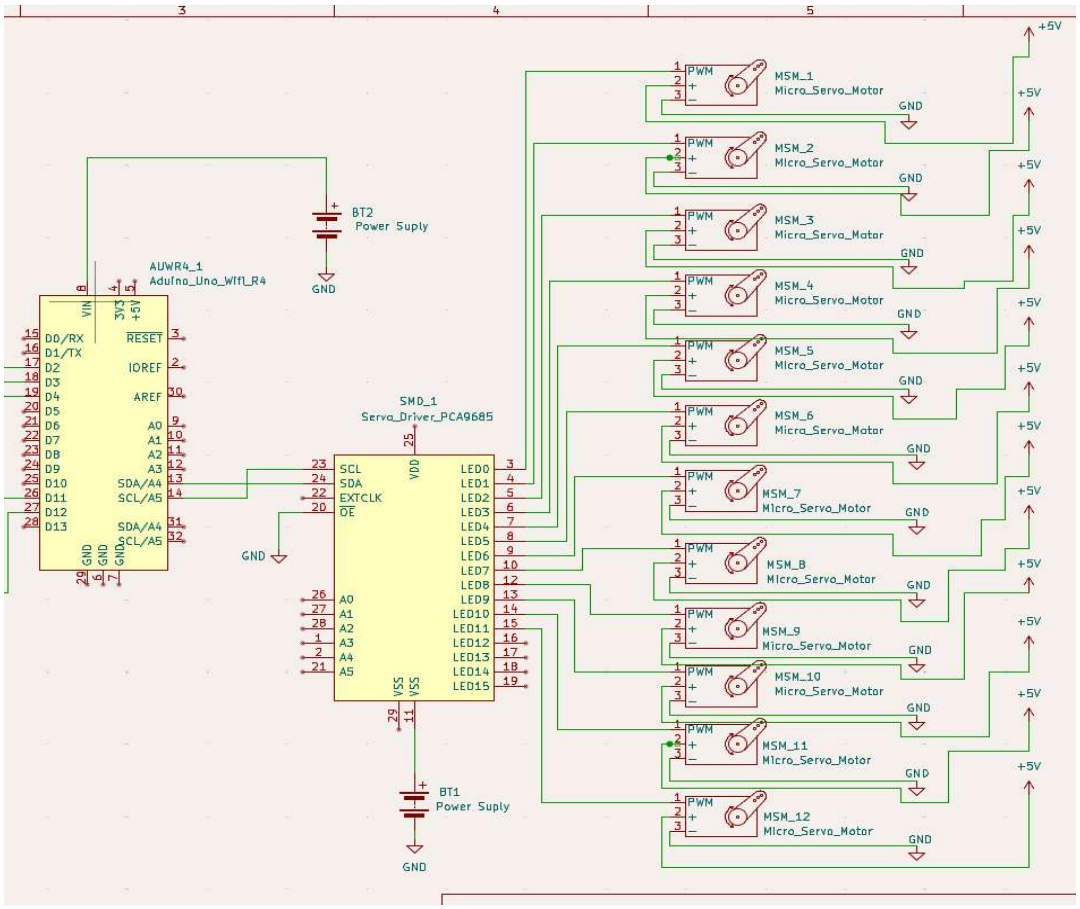

2.2.2 Sub-circuit #2: Ultrasonic Sensor (US_1)

This sub-circuit is meant to describe the usage of the US_1 (Ultrasonic sensor), as well as highlight the means to which it communicates with the AUWR4_1 (Arduino Uno R4 Wifi).

An ultrasonic sensor is a device that can measure the distance to an obstacle using ultrasonic waves. Using a single transducer, it can send and receive soundwaves at a frequency past the human hearing threshold.
The ultrasonic sensor has a trigger pin, which sends out an initial wave. Then, it uses the echo pin to receive the reflected wave. Given the time between trigger and echo, the distance between the device and the obstacle can be calculated.

The Castle will use an ultrasonic sensor to detect obstacles in front of it. This will grant the Castle a level of autonomy. It will also prevent damage to the Castle from crashing into objects. If it detects an obstacle closer than 10 cm in front of the sensor, the Castle will perform a left turn. (HRS-3.1.5)(HRS-3.3.2)

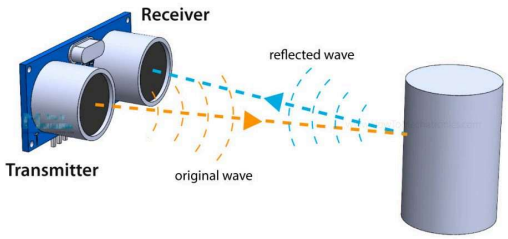

Image From: https://howtomechatronics.com/tutorials/arduino/ultrasonic-sensor-hc-sr04/

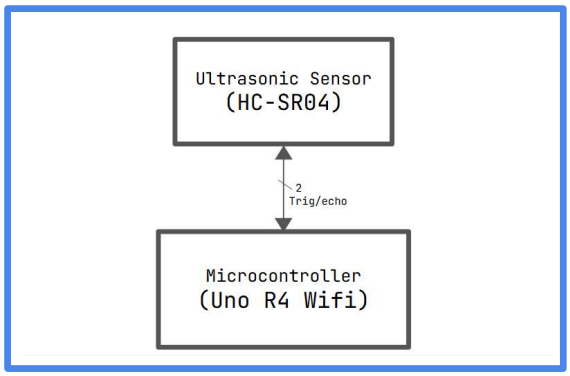

Converting Time to Distance:
By using the amount of time between the ultrasonic signals being sent and received, the distance can be calculated with the following formula:

$$Distance = (Speed\ of\ Sound\ x\ Time)/2$$

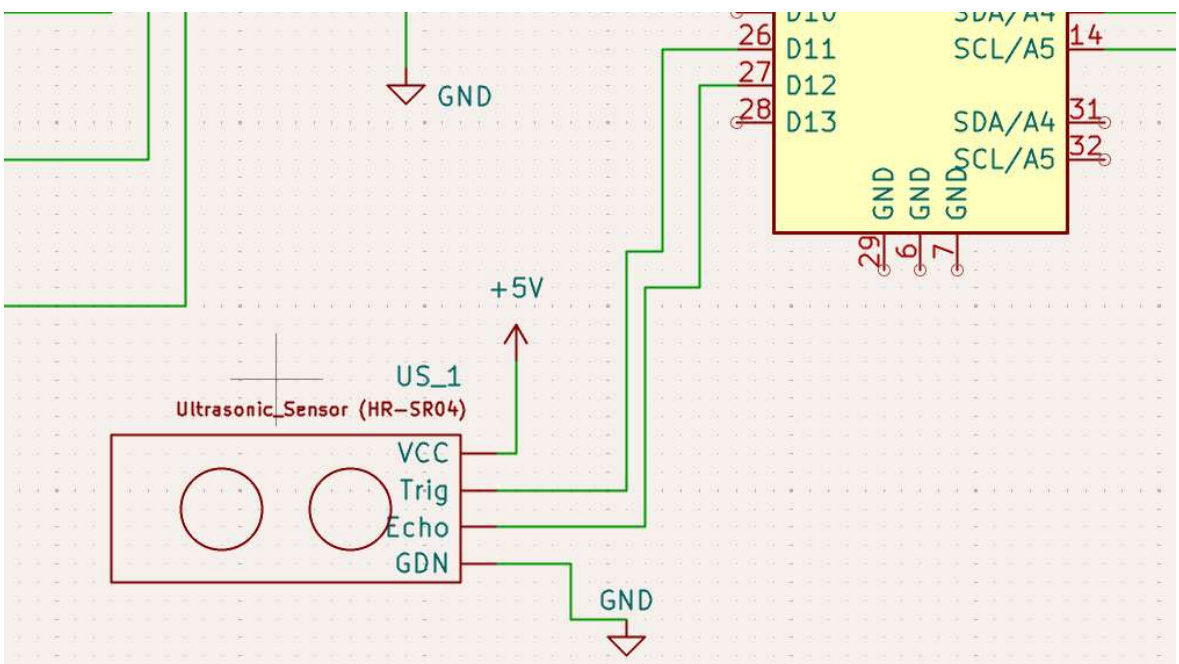

2.2.3 Sub-Circuit #3: Shift Register (SR_1)

This sub-circuit will detail the integration of the SR_1 (shift register), BZ_1(Passive Buzzer), and D_1 to 4(LED Diodes).

A shift register is an IC that uses a series of flip-flops, in which the output of one is the input to the next. Each flip-flop can store 1 piece of data, and the data can move in accordance with an applied clock pulse. This allows bit shifting, which can increase the number of outputs available. The 74HC595 allows for control of up to 8 output pins for just 3 digital inputs. (HRS-3.4.3)

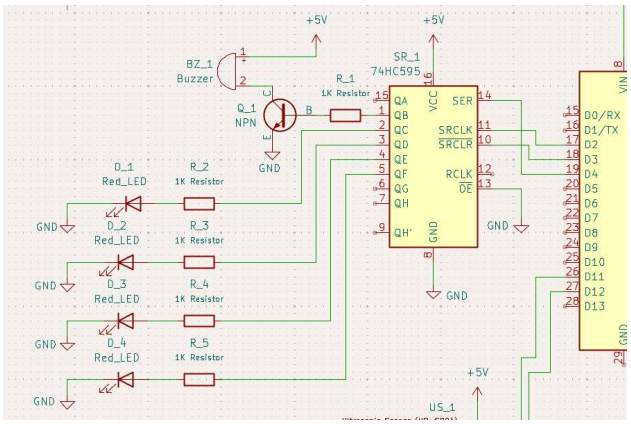

The 74HC595 shift register will be connected to 4 red LEDs and a passive buzzer. The LEDs will be placed in the mouth of the Castle to light up the heart of the contraption. This will include a model of Calcifer, from *Howl's Moving Castle*. The buzzer will be used to play the OST of the movie, "Merry-go-round of life." (HRS-3.1.6) (HRS-3.4.5)(HRS-3.4.6)

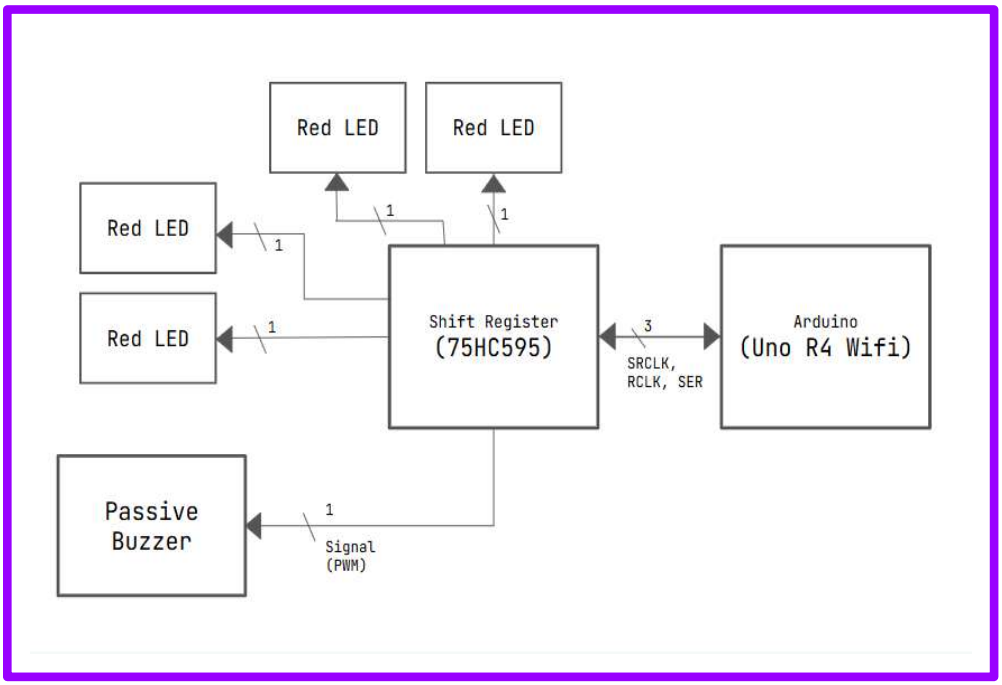

2.3 Internal Interfaces

2.3.1 Arduino (AUWR4_1) and Servo Motor Driver (SMD_1)

This interface is essential for communication between the AUWR4_1 (Arduino) and the SMD_1 (Servo Motor Driver), which controls the MSMs. It enables the Arduino to send precise positions to the MSMs through the driver.

Signal Name	From (RefDes) and Pin	To (RefDes) and Pin	Communication Protocol
GND	AUWR4_1,GND	SMD_1, GND	The SMD_1 uses I2C for communication with the AUWR4_1. I2C is a serial communication protocol, where data is sent as packets to the receiving device's address. The SCL is the I2C clock line. This allows the 2 devices to be synchronized. The SDA is the I2C data line. It works bi-direcionally and can send and receive data.
VCC	AUWR4_1,5V	SMD_1, VCC	
V+	N/A (External)	SMD_1, V+	
SCL	AUWR4_1, A5	SMD_1, SCL	
SDA	AUWR4_1, A4	SMD_1 , SDA	
OE	N/A	SMD_1 , GND	

2.3.2 Servo Motor Driver(SMD_1) and Micro Servo Motors (MSM_1 to 12) (x 12)

This interface is responsible for the movement of the Castle. Through the SMD_1, each motor accurately moves to the desired position for group functions such as walking.

Signal Name	From (RefDes), Pin	To (RefDes), Pin	Communication Protocol
VCC	SMD_1 , 0 to 11 (VCC)	MSM_1 to 12, 1	In this interface, the SMD_1 sends PWM signals to the MSMs.

GND	SMD_1, 0 to 11 (GND)	MSM_1 to 12, 2	The desired position is sent through the signal wire with PWM, using a clock cycle of one pulse per 20ms. The length of the pulse determines the position of the output shaft.
PWM	SMD_1, 0 to 11 (PWM)	MSM_1 to 12, 3	

2.3.3 Arduino (AUWR4_1) and Ultrasonic Sensor(US_1)

This interface establishes rudimentary vision for the Castle through communication between the US_1 (Ultrasonic Sensor) and the AUWR4_1(Arduino).

Signal Name	From (RefDes), Pin	To (RefDes), Pin	Communication Protocol
VCC	AUWR4_1, 5V	US_1, VCC	The Ultrasonic sensor uses Trigger-Echo to measure distance. When a High pulse is sent to the Trigger pin, the US responds by sending a 8-pulse ultrasonic signal. After the pulses are sent, the echo pin is pulled high to receive the pulses. When the echo stops receiving pulses, it turns low. The time that the Echo pin is pulled high is used to determine the distance from the obstacle.
GND	AUWR4_1, GND	US_1, GND	
Trig	AUWR4_1, 11	US_1, Trig	
Echo	AUWR4_1, 12	US_1, Echo	

2.3.4 Arduino(AUWR4_1) and Shift Register(SR_1)

Signal Name	From (RefDes), Pin	To (RefDes), Pin	Communication Protocol
VCC	AUWR4_1, 5v	SR_1, 16	74HC595 uses I2C to communicate with the Arduino.
GND	AUWR4_1, GND	SR_1, 8	
SER	AUWR4_1, 4	SR_1, 14	*See section 2.3.1 for an

SRCLK	AUWR4_1, 2	SR_1, 11	explanation on I2C.*
RCLK	AUWR4_1, 3	SR_1, 12	
OE	N/A	SR_1, GND	
SRCLR	N/A	N/A	

2.3.4 Shift Register(SR_1), Passive Buzzer(BZ_1), LED Diodes(D_1)

Signal Name	From (RefDes), Pin	To (RefDes), Pin	Communication Protocol
Positive	N/A	BZ_1, 1 (VCC)	The BZ_1 will use PWM to play music.
Negative	SR_1, 1	BZ_1, 2	
Anode	SR_1, 2 to 4	D_1 to 4, 1	*See section 2.3.2 for an explanation on PWM.*
Cathode	N/A	D_1 to 4, 2 (GND)	

3. Scheduling

3.1 Tasks

Task 1: Order and Model Parts as Needed (27/10/2025 - 6/11/2025)

- Order components needed for this project
- Use CAD to model the leg sections and base of the Castle.
- 3d print the leg sections
- 3d print the base sections.

Task 2: Assemble the Body (07/11/2025 - 14/11/2025)

- Test the servo motor driver library.
  - Adafruit PCA9685 Library (available on Arduino Library Manager)
- Sand down all 3d printed parts, and check that the components fit.
- Connect and assemble legs, Body, and wire on breadboard.

Task 3: Create a Basic Walk Cycle (17/11/2025 - 26/11/2025)

- Make the Body stand up, and sit down.

- Let the Castle take its first step.
  - Make each leg move one at a time.

Task 4: Test Payload (17/11/2025 - 28/11/2025)

- Test if the Castle can carry 250g. If not, then test how much it can carry, and adjust the Decorative Castle plans accordingly. (ie. Lighter Material, smaller)

Task 5: Create Right and Left Turns (01/12/2025 - 10/12/2025)

- Test how the order of leg movements affects the direction.
  - If moving them in a specific order affects direction, use this to turn the Castle.
- Test how different positions of the first joint (nearest to the Body) will affect balance and movement.
- Choose a method to turn left or right.
- Create basic keyboard controls to move the Castle using the serial monitor when the power supply is the computer. (HRS-3.2.1) (HRS-3.2.3)

Task 6: Detection with Ultrasonic Sensor (11/12/2025 - 18/12/2025)

- Wire up the Ultrasonic sensor, and calibrate it to tell the Castle when there is an obstacle less than 10cm in front of the sensor.
- Make the Castle perform a left turn when an obstacle is detected in front.

Task 7: Make Decorative Castle (06/1/2026 - 12/1/2026)

- Connect the Decorative Castle to the Body.
  - Use LEGOto make the top detachable.

3.2 Gantt Timeline

Condensed Timeline:

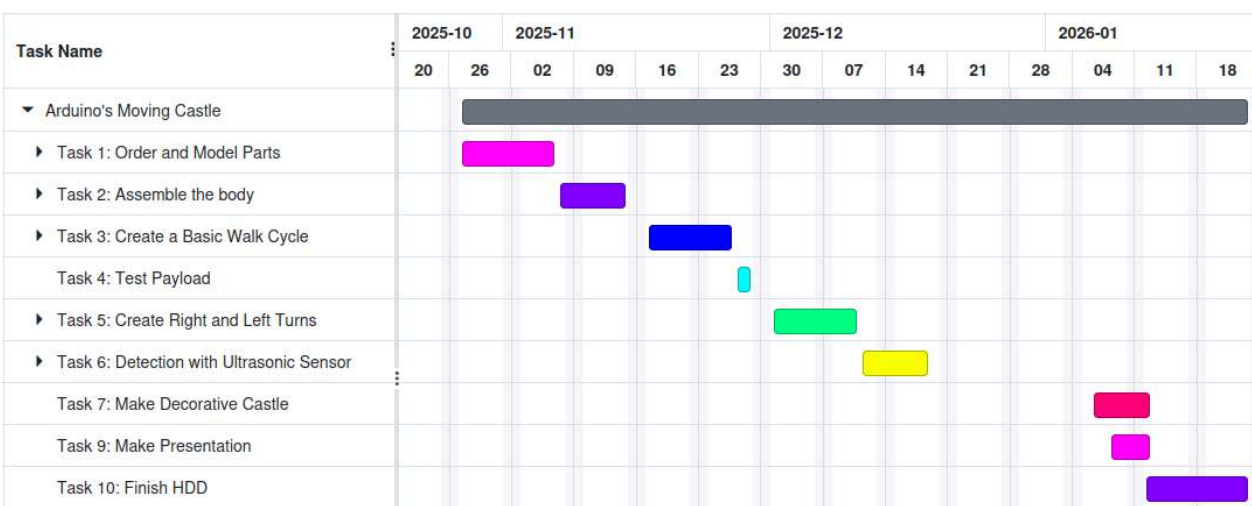

Expanded Timeline

Appendix

Appendix.A Schematic

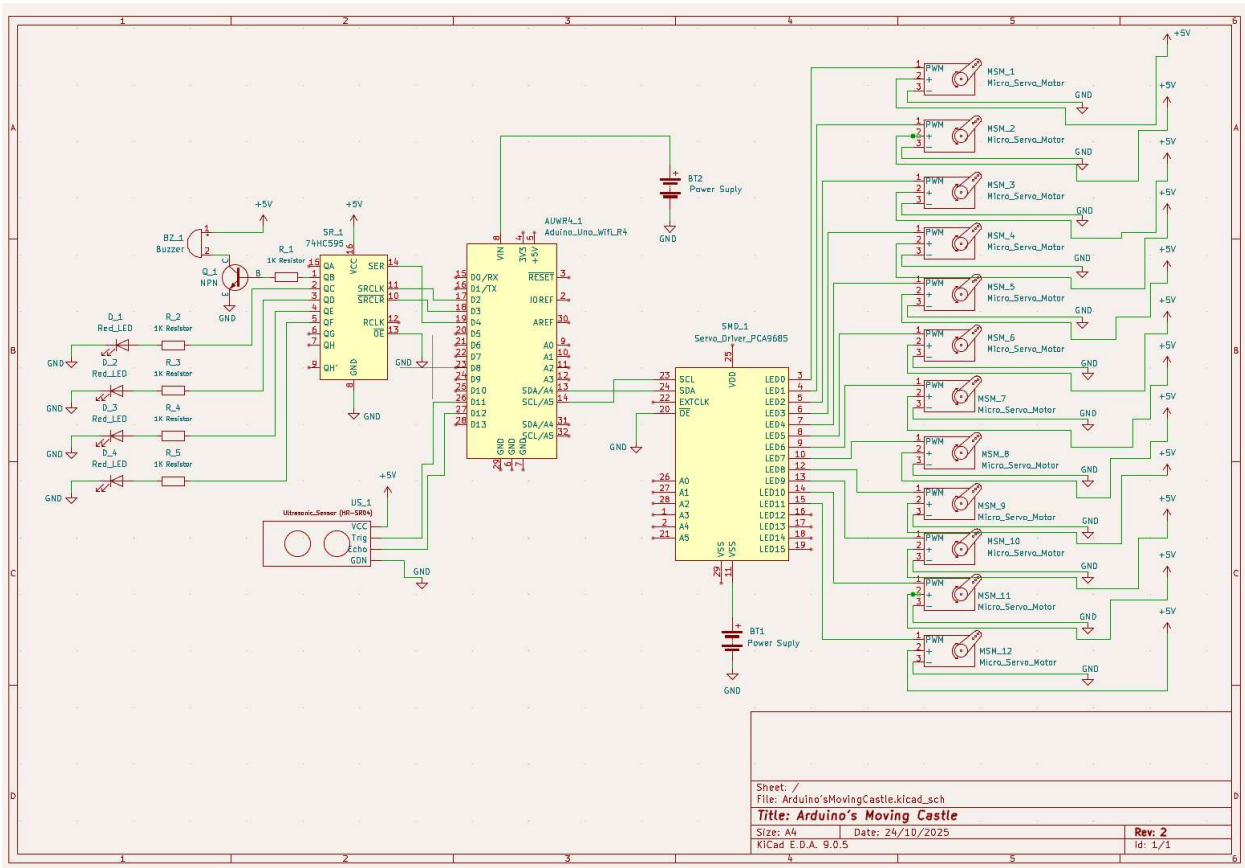

Appendix.B Parts List

RefDes	#	Part Description	Link to Product
MSM_1,MSM_2, MSM_3,MSM_4, MSM_5,MSM_6, MSM_7,MSM_8, MSM_9, MSM_10, MSM_11,MSM_12	12	Miuzei MG90S 9G Micro Servo Motor	Miuzei MG90S 9G Micro Servo Motor Metal Geared Motor Kit for RC Car Robot Helicopter, Mini Servos for Arduino Project (10) : Amazon.ca: Toys & Games

SMD_1	1	PCA9685 Servo Motor Driver	HUAREW PCA9685 16 Channel PWM Servo Driver Board 12 bit IIC Interface Module Compatible with Arduino and Raspberry Pi (2pcs) : Amazon.ca: Tools & Home Improvement
US_1	1	HC-SR04 Ultrasonic Sensor	*Owned* Freenove RFID Starter Kit V2.0 with Board V4 (Compatible with Arduino IDE), 267-Page Detailed Tutorial, 198 Items, 49 Projects : Amazon.ca: Electronics (Included in this kit)
AUWR4_1	1	Freenova Uno R4 Wifi Arduino	*Owned* Freenove RFID Starter Kit V2.0 with Board V4 (Compatible with Arduino IDE), 267-Page Detailed Tutorial, 198 Items, 49 Projects : Amazon.ca: Electronics (Included in this kit)
SR_1	1	74HC595 Shift Register	*Owned* Rosrrtlm 25Pcs 74HC595 IC 8-Bit Shift Register DIP-16 Circuit w/Pins : Amazon.ca: Industrial & Scientific
D_1, D_2, D_3, D_4	4	Red LED Diodes	*Owned* Freenove RFID Starter Kit V2.0 with Board V4 (Compatible with Arduino IDE), 267-Page Detailed Tutorial, 198 Items, 49 Projects : Amazon.ca: Electronics (Included in this kit)
R_1, R_2, R_3, R_4, R_5	5	1KΩ Resister	*Owned* Freenove RFID Starter Kit V2.0 with Board V4 (Compatible with Arduino IDE), 267-Page Detailed Tutorial, 198 Items, 49 Projects : Amazon.ca: Electronics (Included in this kit)
BZ_1	1	Passive Buzzer	*Owned* Freenove RFID Starter Kit V2.0 with Board V4 (Compatible with Arduino IDE), 267-Page Detailed Tutorial, 198 Items, 49 Projects : Amazon.ca: Electronics (Included in this kit)

U_1	1	Transistor	*Owned* [Freenove RFID Starter Kit V2.0 with Board V4 (Compatible with Arduino IDE), 267-Page Detailed Tutorial, 198 Items, 49 Projects : Amazon.ca: Electronics](#) (Included in this kit)
BT1, BT2	2	Battery Holder	*Owned* [Freenove RFID Starter Kit V2.0 with Board V4 (Compatible with Arduino IDE), 267-Page Detailed Tutorial, 198 Items, 49 Projects : Amazon.ca: Electronics](#) (Included in this kit)

Appendix.C Visual Design and Sketches

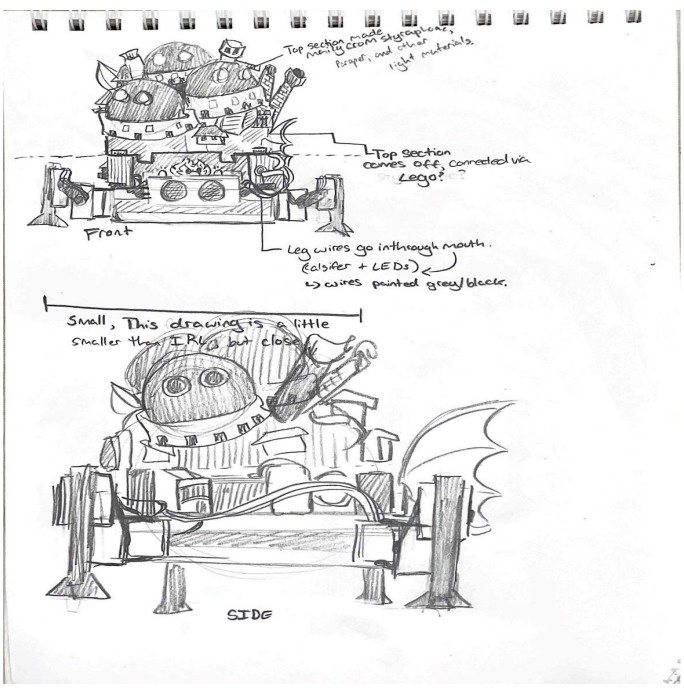

The Castle will be made up of 2 main parts: the Body and the Decorative Castle. The Body is at the bottom. This includes all hardware aspects of the Castle, including the legs and microcontroller.

The Decorative Castle is made up of 2 sections, both of which are purely aesthetic. Lego will be used to connect the top and bottom sections for easy access to the electronics. (HRS-3.5.4)

In the front, there will be a gap between the sections, which will function as a mouth. The wires for the legs will run across the body, into the mouth, to connect to the Arduino. The mouth will house the LEDs, the passive buzzer, and a small clay model of Calcifer.

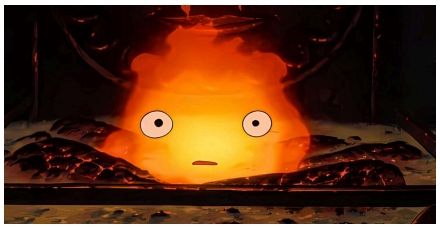

*Fanart drawn by Caroline Busche, of Calcifer from *Howl's Moving Castle**
Calcifer by CarolineBuschel on DeviantArt

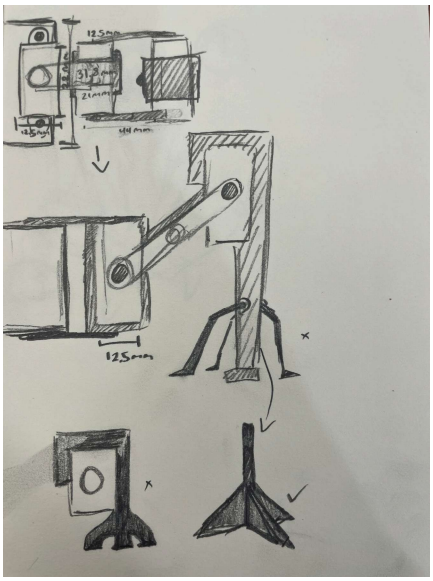

The legs of the Body will have 3 degrees of motion. They are going to be small, short, and have a wide triangular base to distribute weight, and reduce strain on the joints.

There are two main reasons that the legs need to be short. First, to maximize the torque of the motors, short legs are key. Second, shorter legs, with a wide base, to increase the stability of the Castle, especially when walking.

There will be 3 places for the wires of the legs to enter the Body. First is through the mouth, second is through the tail, and third is through the gaps at the bottom of the Body.

The Body, including legs, will be modeled and 3d printed. The Decorative Castle will be primarily carved out of styrofoam and paper. This will both keep the structure light and keep the material costs low. The styrofoam will also be painted and textured to match the source material. (HRS-3.5.1) (HRS-3.5.5)

Appendix.D. Acronyms, Abbreviations, and Terms

PWM: Pulse with Modulation
OST: Original Soundtrack
LED: Light emitting diode
MSMs: Micro Servo Motors
RefDes: Reference Designator

The Castle: The fully functional project, including both functional and decorative aspects.
The Body: Purely hardware aspects of this project, including electronics and 3d printed components.
The Decorative Castle: Purely visual aspects of this project.

Appendix.E Resources

Micro Servo Motor and motor driver:

- https://www.jameco.com/Jameco/workshop/Howitworks/how-servo-motors-work.html?srsltid=AfmBOoqDbSluG3l-a4yF4YfHnc7yd-6rsIU-3rFxhtc33EYqL0gfvpnJ
- https://opencoursehub.cs.sfu.ca/bfraser/grav-cms/cmpt433/links/files/2022-student-howtos/ServoPWMGuide_SG90_9gMicroServo.pdf
- https://www.engineersgarage.com/servo-motor-sg90-9g-with-89c51-microcontroller/
- https://www.amazon.ca/Miuzei-MG90S-Servo-Helicopter-Arduino/dp/B0BWJ26PX2/ref=sr_1_1_sspa?crid=3TURWY6VDTLPY&dib=eyJ2IjoiMSJ9.CxxV_tyy4dPHDJETg8eHV2RS-pNrTEKtIHbPQr_C5zVIW5egg-3Ay8PmyopcRhwdjIi3o3oh8jzEdmEpup9SSU_cNPpqx58w_IXsShfn8bRpG0iFBZRmOfscTE-2yY-gSfaj2SRb_i5aPs9qzVO2495A-KklIqlsJC20HDImOvPkBGC0AUq6sUMaSVLB23rN1_hNDz6ovSk5evYLfjwmUy1dKXqVdwIywKKLZTasmWBfRy1hBkb_4Ua4FLRjBYXFR07RNBLHoGqkJ4HbkOQBu4svDnWxcN01O9mmFAcJMU8.YtAF9GmYd_4VjAPVDwDOMwsjH6-FTUC9SKhUDLq9BtU&dib_tag=se&keywords=micro%2Bservo%2Bmotors&qid=1759761610&sprefix=mictro%2Bservo%2Bmotors%2Caps%2C72&sr=8-1-spons&sp_csd=d2lkZ2V0TmFtZT1zcF9hdGY&th=1
- https://www.amazon.ca/Servo-Driver-Breakout-Micro-16-Channel/dp/B07H6KMFYR?source=ps-sl-shoppingads-lpcontext&ref_=fplfs&psc=1&smid=AA80HCB088OD
- PCA9685 16-channel, 12-bit PWM Fm+ I2C-bus LED controller

Ultrasonic Sensor:

- https://howtomechatronics.com/tutorials/arduino/ultrasonic-sensor-hc-sr04/
- HC-SR04 Ultrasonic Sensor Working, Pinout, Features & Datasheet

Shift Register and Aux parts:

- https://learn.adafruit.com/74hc595/pinouts
- Buzzer Pinout, Working, Specifications & Datasheet

Communication Protocols

- Basics of the I2C Communication Protocol

Similar Projects:

- https://www.instructables.com/Four-legged-Robot-With-PCA9685-and-12-Servo-Motors/
- https://youtu.be/fvUhFBq7Z4g?si=pnIQDTRk0KjDDZ0i
- https://youtu.be/sDuzb-I00-4?si=VayII5OOXJdVWIy_

***Howl's Moving Castle* References:**

- https://youtu.be/iwROgK94zcM?si=V72mpzHvMs1eJ3aL